Refer to Service Bulletin: SB-6-180

Customer Service
1-800-445-3988

Air Control Unit

130099 (HAR-602)

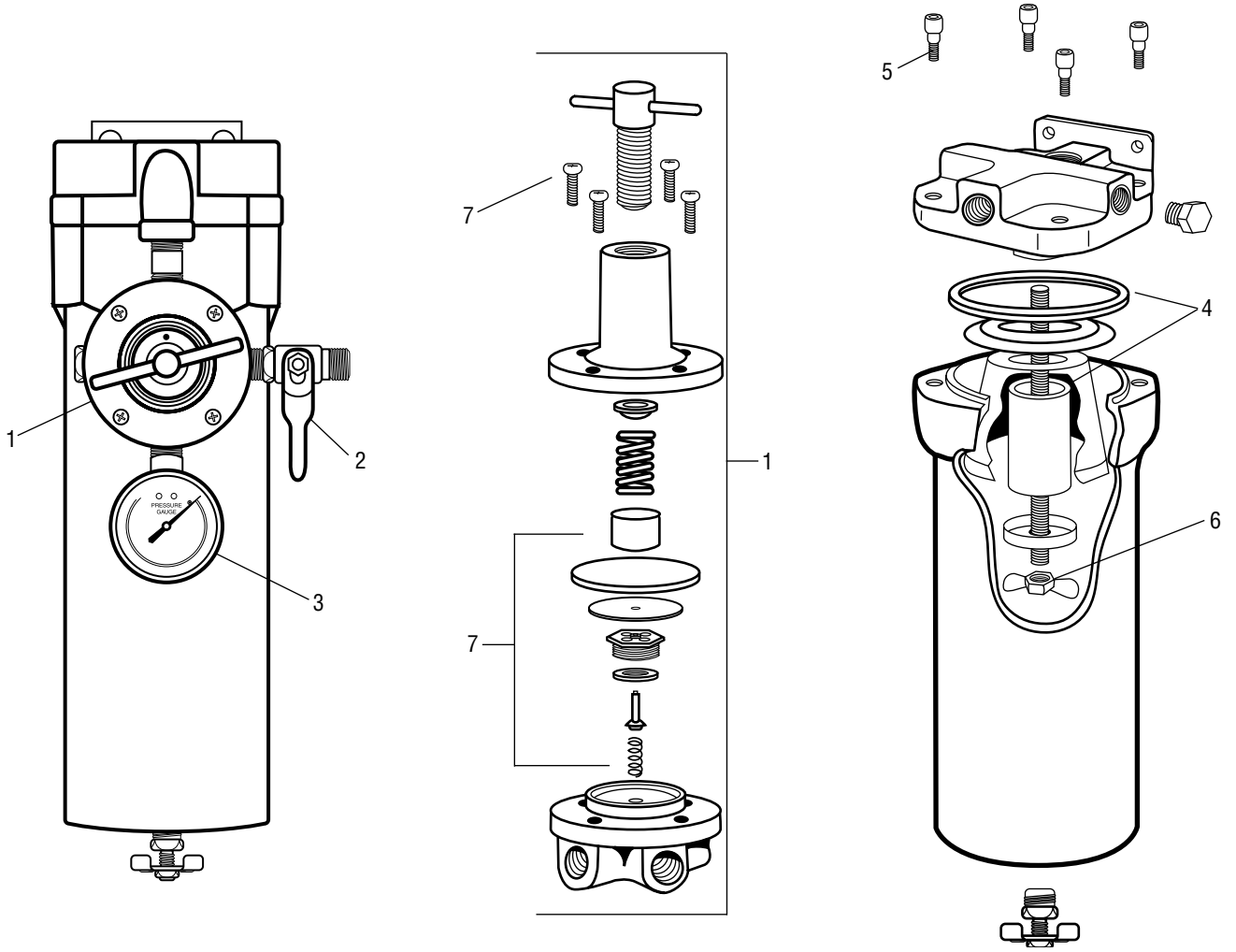

Ref. No.	Order No.	Model No.	Description	Ind. Parts Required
1	130100	HAR-520	Regulator	1
2	240160	VA-594	Shut-Off Valve	1
3	192314	GA-375	Pressure Gauge	1
4	192315	HAF-39	Element & Gasket Kit	1
5	*	*	Socket Head Screw, 1/4-20 x 3/4	4
6	*	*	Wingnut, 1/4-20	1
7	802112	KK-5088	Regulator Kit	1

* Purchase Locally